2011-08-02

Manfrotto
Imagine More

ART. MH057A5-LONG
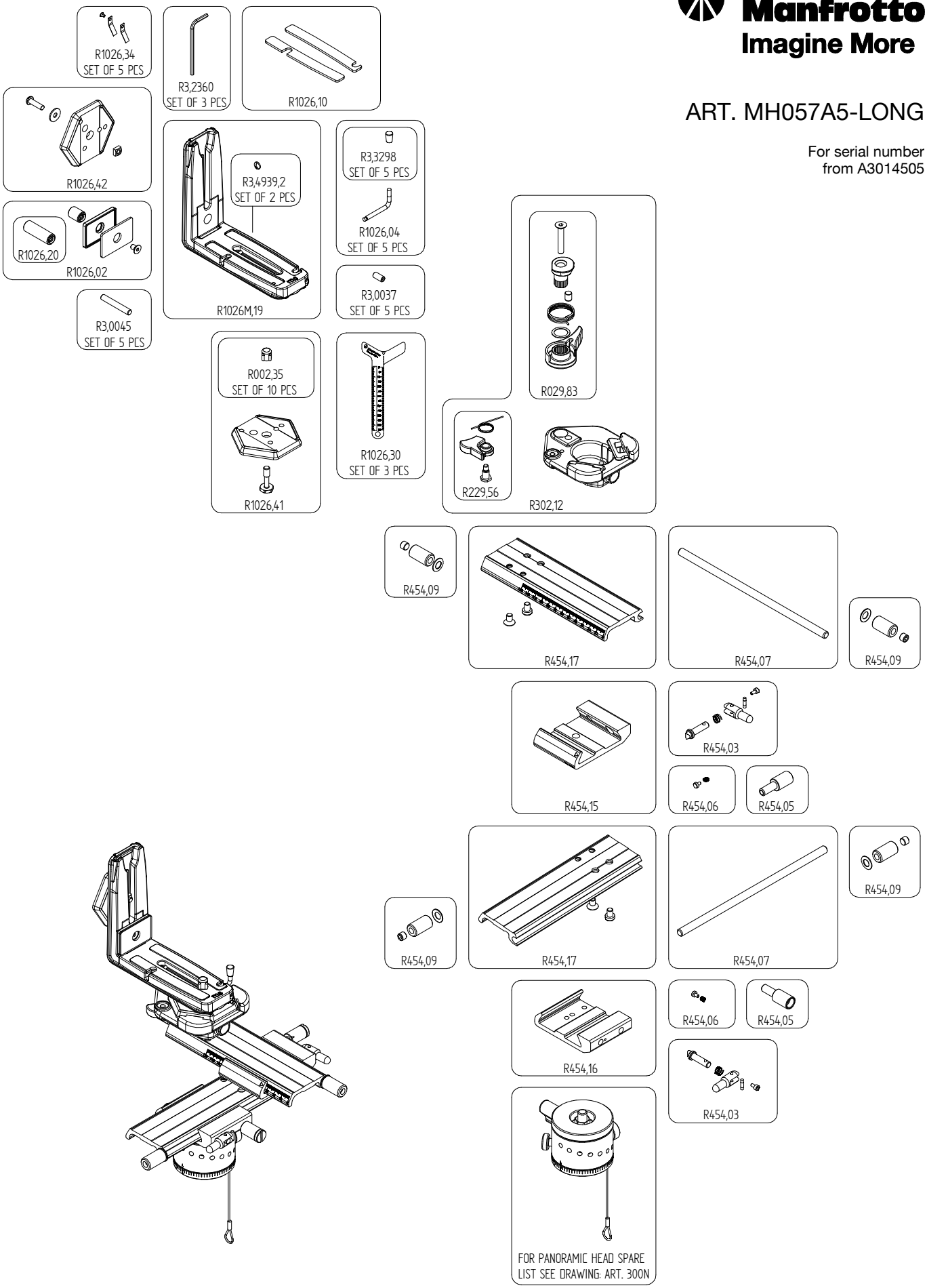
For serial number
from A3014505